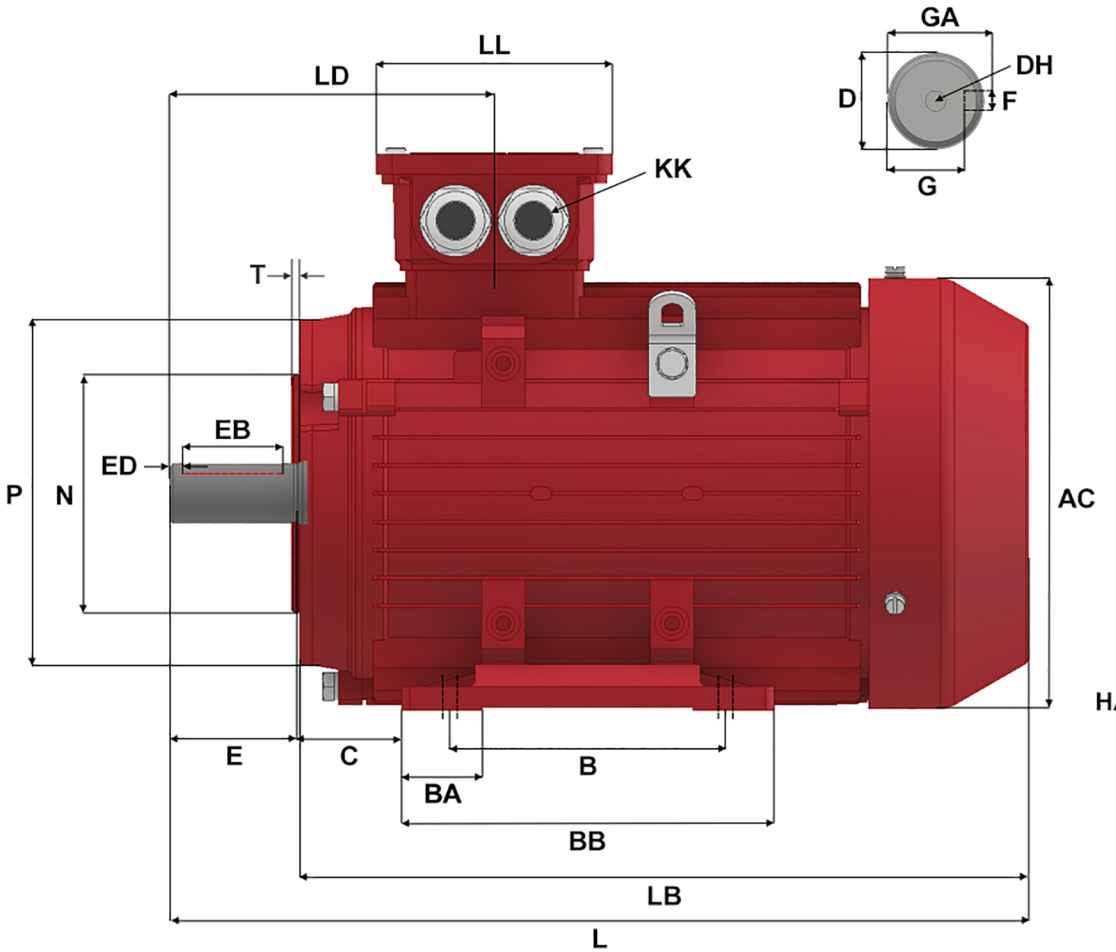

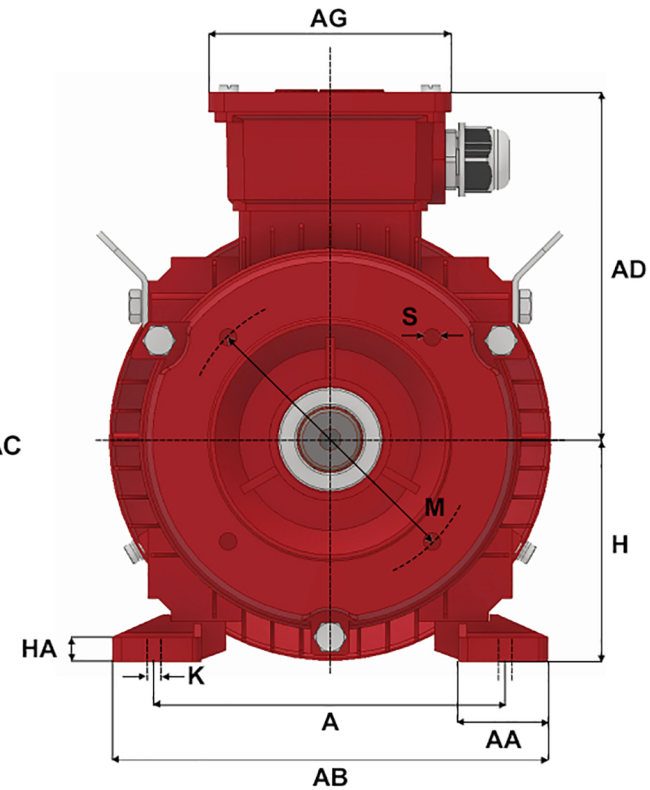

Version: 1JLEM			Revised: 09-11-2019			HP	RPM	FRAME	ENCLOSURE	IJA112M3-2-B34A		
Customer is responsible in determining that Max Motion product will fit/perform suitably in the intended application						10	3515	112M	TEFC			
A	B	C	D	E	F	G	H	K	L	M	N	P
190	140	70	28	60	8	24	112	12 X 16	400	130	110	160
S	T	AA	AB	AC	AD	AG	BA	BB	DH	EB	ED	GA
M8	3.5	41	227	230	178	117.5	43	180	M10 X 22	50	5	31
HA	KK (1)	KK (2)	KK (3)	LB	LD	LL						
12	M32 X 1.5	3/4" NPT	-	340	151.5	117.5						